## 11. Exploded view

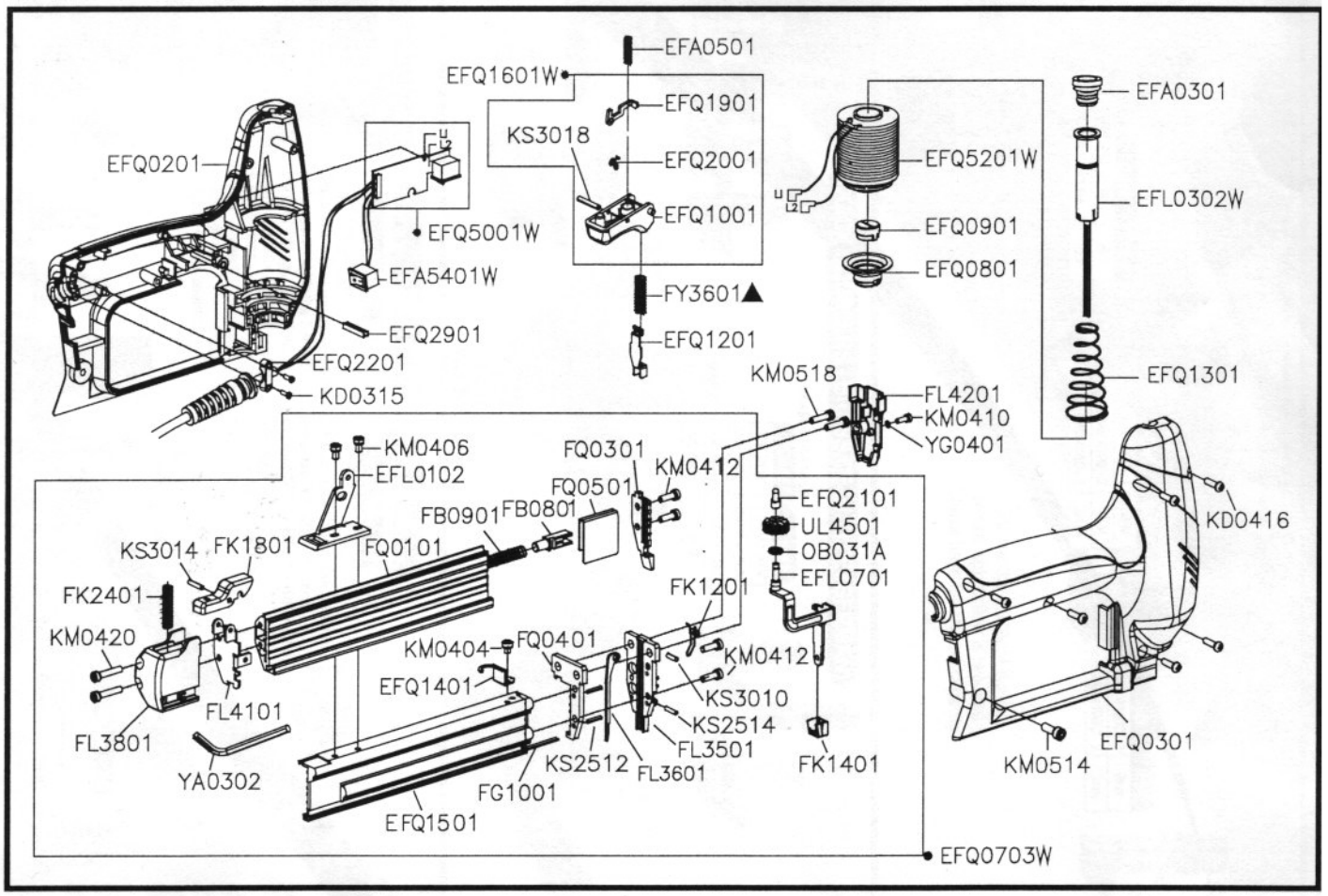


## 12. Parts list

| Part_No | Description | Q'ty | Part_No | Description | Q'ty | Part_No | Description | Q'ty |
|---|---|---|---|---|---|---|---|---|
| EFA0301 | PISTON STOP | 1 | EFQ2201 | FIXTURE | 1 | ▲ FY3601 | COMPRESSION SPRING | 1 |
| EFA0501 | SPRING | 1 | EFQ2901 | STOP PLATE | 1 | KD0315 | SCREW | 2 |
| EFA5401W | POWER SWITCH ASSY. | 1 | EFQ5001W | PCB ASSY. | 1 | KD0416 | SCREW | 6 |
| EFL0102 | SUPPORT | 1 | EFQ5201W | COIL ASSY. | 1 | KM0404 | HEX.SOC.HD.BOLT | 1 |
| EFL0302W | DRIVER ASSY. | 1 | FB0801 | PUSHER PIN | 1 | KM0406 | HEX.SOC.HD.BOLT | 2 |
| EFL0701 | WORK CONTACTING ELEMENT | 1 | FB0901 | PUSHER SPRING | 1 | KM0410 | HEX.SOC.HD.BOLT | 1 |
| EFQ0201 | FRONT BODY | 1 | FG1001 | BAR | 1 | KM0412 | HEX.SOC.HD.BOLT | 4 |
| EFQ0301 | REAR BODY | 1 | FK1201 | SPRING | 1 | KM0420 | HEX.SOC.HD.BOLT | 2 |
| EFQ0703W | MAGAZINE ASSY. | 1 | FK1401 | SAFETY CUSHION | 1 | KM0514 | HEX.SOC.HD.BOLT | 1 |
| EFQ0801 | BUMPER COVER | 1 | FK1801 | LATCH | 1 | KM0518 | HEX.SOC.HD.BOLT | 2 |
| EFQ0901 | BUMPER | 1 | FK2401 | COMPRESSION SPRING | 1 | KS2512 | SPRING PIN | 2 |
| EFQ1001 | TRIGGER | 1 | FL3501 | COVER PLATE | 1 | KS2514 | SPRING PIN | 1 |
| EFQ1201 | SAFETY | 1 | FL3601 | GUIDE PLATE | 1 | KS3010 | SPRING PIN | 1 |
| EFQ1301 | COMPRESSION SPRING | 1 | FL3801 | COVER | 1 | KS3014 | SPRING PIN | 1 |
| EFQ1401 | FIXED PLATE | 1 | FL4101 | STOP PLATE | 1 | KS3018 | SPRING PIN | 1 |
| EFQ1501 | MAGAZINE SEAT | 1 | FL4201 | PLATE | 1 | OB031A | O-RING | 1 |
| EFQ1601W | TRIGGER ASSY. | 1 | FQ0101 | MAGAZINE CAP | 1 | UL4501 | ADJUSTING WHEEL | 1 |
| EFQ1901 | CONTACT LEVER | 1 | FQ0301 | FRONT PLATE | 1 | YA0302 | HEX BAR WRENCH | 1 |
| EFQ2001 | SPRING | 1 | FQ0401 | GUIDE PLATE | 1 | YG0401 | SPRING WASHER | 1 |
| EFQ2101 | FIXED | 1 | FQ0501 | PUSHER | 1 | | | |